SUPPLY CABLE WIRE COLOR & OPERATION

EQD Pin #	Wire Color	Function
1	Brown	Manual Run
2	Red	L1
3	Black	L2 or Neutral
4	Green w/ Yellow Stripe	Ground
5	Yellow	Alarm Power Feed
6	Blue	Alarm Power Return

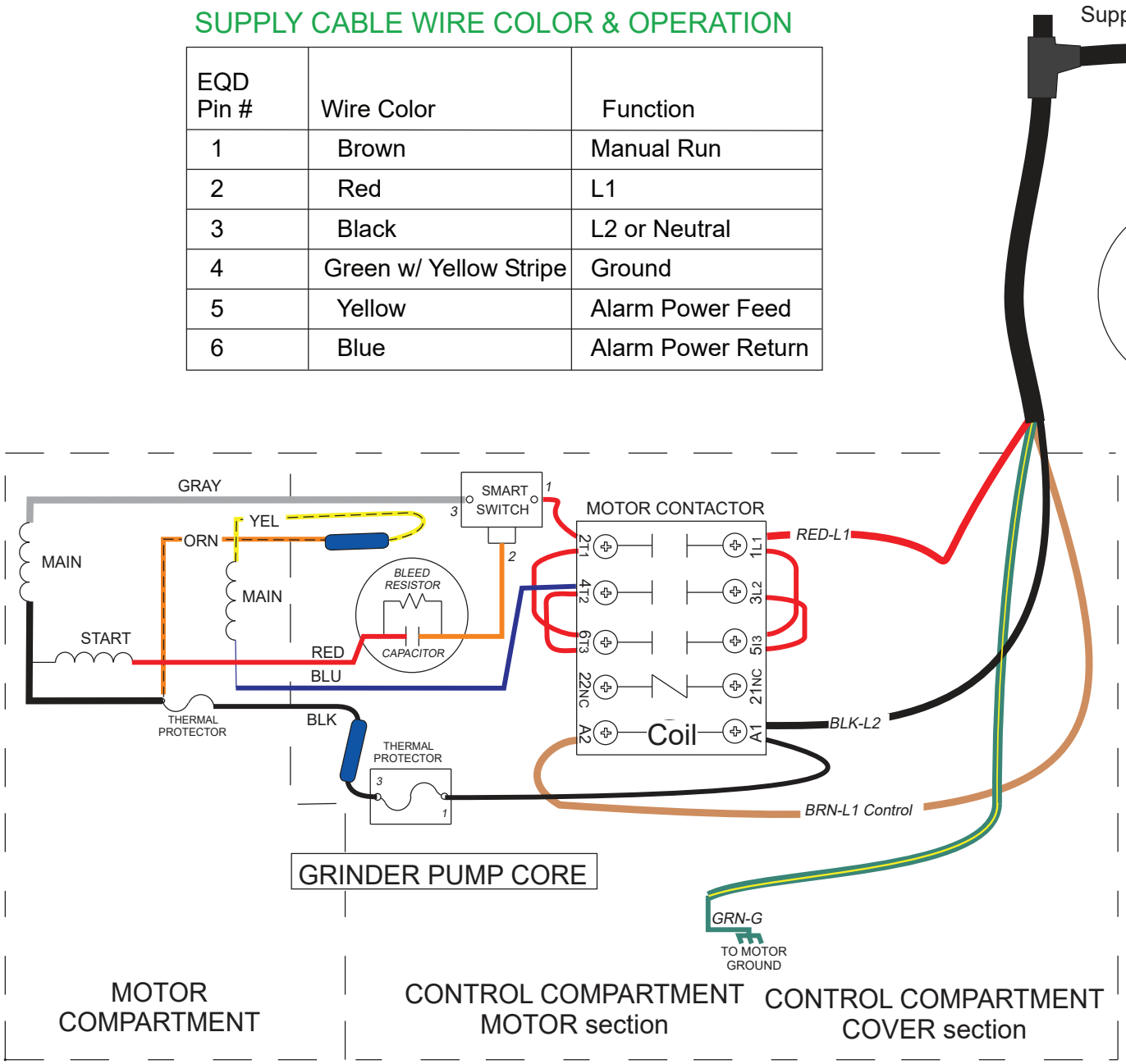

HARD WIRE OPTION

Alarm Yellow and Blue wires go to the alarm panel only Motor Control Red and Brown wires go to both alarm panel and motor contactor

NA0036P12 B
120 Volt 60 Hz
Control Wiring Tag

e one